Using...

Surface water source heat pumps:

Code of Practice for the UK

Harnessing energy from
the sea, rivers, canals and lakes

... a guide for building owners and developers

CIBSE

HPA HEAT PUMP ASSOCIATION

GSHP association

CP2
2016

How do water source heat pumps work?

Heat pumps operate by extracting low grade heat from a source (this could be surface water, ground water, air or ground) upgrading it to a useful temperature for use in local heat networks or single buildings.

The water source heat pump can also be used for cooling by absorbing heat from a building or other similar load and transferring it into the source. (A domestic refrigerator is a small-scale example of a heat pump working in this way.) Alternatively, the heat rejected can be recycled for use by an alternative heating load or to provide domestic hot water.

The Code of Practice focuses on the use of surface water (i.e. rivers, lakes, canals, the sea) as the source.

The diagram to the right shows the key features of a typical system and the diagram below shows a scheme as used by the RNLI for its lifeboat houses.

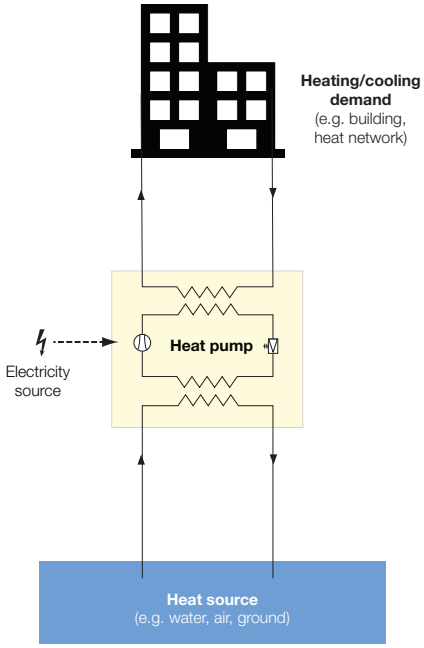

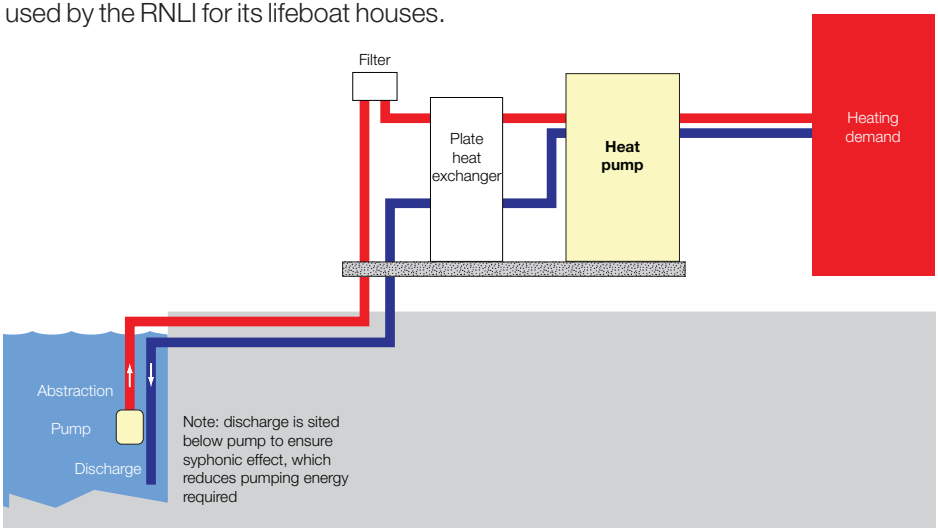

(Reproduced courtesy of the Royal National Lifeboat Institution)

What are the benefits of using a water source heat pump system?

Economic benefit

In most cases the key motivating factor for installing a SWSHP system will be financial benefit through reduced energy bills:

- SWSHP systems can mitigate against rising energy costs and should provide attractive returns on investment.
- It is expected that, owing to uncertainty around the supply and security of fossil fuels, energy prices will rise, bringing increased financial benefit to the use of alternative, renewable energy sources.
- The UK Government's heat strategy identifies an important role for heat pumps and so there are various grants and incentives to encourage uptake of this technology (see Appendix B).
- The increased capital cost of the heat pump system should be compensated by the operating and maintenance cost savings, which can be substantial when accrued over the whole life of the building.
- Use of a heat pump should bring additional cost savings that are often overlooked. For instance, if substituting for a conventional gas boiler then gas supply and a flue will not be needed.
- As heat pump systems can be used for heating and cooling simultaneously they can be designed to allow thermal energy to be economically reused within the same system rather than generated or rejected, which offers opportunities for carbon-, energy- and cost-efficient systems.
- These balanced systems are more compact and may be located in a basement plantroom. The roof space released can be extremely valuable.

Environmental and reputational benefit

SWSHPs are a low carbon alternative to using fossil fuels and so benefit the environment. They are therefore an excellent opportunity for individuals or organisations to reduce their carbon footprint and demonstrate corporate social responsibility.

Legislative requirements

There is an increasing amount of national and international legislation aimed at decarbonising UK heat supply, such as the Climate Change Act 2008 or Energy Performance of Buildings Directive. Use of heat pump systems are one of the ways to comply with this legislation.

Planning regulations often require new developments to include a proportion of renewable technology in order to reduce carbon emissions. Where developments are near to surface water it presents an opportunity to recover renewable heat using SWSHPs. Although less well known than ground and air source, surface water source heat pumps offer a good way to meet planning requirements.

How will the Code of Practice help me?

What is in the Code?

The Code of Practice has been produced to raise standards by setting minimum requirements (and suggested) best practice and by integrating the supply chain across the whole life of a project.

The Code is written to cover all **stages** of the development cycle of a project from feasibility through design, construction, commissioning and operation.

The core of the Code is structured as follows (see Figure 1, Plan of Work):

— The typical sequence of a project by **stage** from initial brief and feasibility through to decommissioning. The Code may be used either for the entire project or for a particular stage but the greatest value will be obtained when it is followed for all stages.

— For each project stage, a number of **objectives** are set.

Hydroplates being installed at Kings Mill Hospital, Mansfield (reproduced courtesy of Geothermal International)

— For each objective a number of **minimum requirements** are defined to achieve the objectives. All of these requirements will need to be met if the project is to comply fully with the Code.

— Roles and **responsibilities** are established for different stages.

How to use the Code

Use of the Code of Practice can be specified in contracts or tender documents, for entire projects or for specific stages (e.g. construction). If the requirements in the Code of Practice are adhered to, you can be confident that:

— A carefully considered feasibility/design framework will have been followed.

— Legislative and regulatory requirements will have been identified and met.

— Reporting and information handover will allow effective oversight of the project.

You do not need to be a technical expert in heat pump systems to use the Code for procurement or contractual purposes. The Code has been designed (following extensive industry-wide consultation and in collaboration with DECC) to give clients and developers confidence that commonly agreed minimum standards are being followed, and to allow clear communication between different parties in the supply chain.

Water source heat pumps in use

The installation in **Drammen**, Norway, is an example of a heat pump (using the fjord as its thermal source) feeding into a heat network, which serves a community of 63,000 people and its businesses. Over the year 67 GW·h of the heat network demand is used from the heat pump representing 85% of the annual demand. The network requires hot water generation at temperatures of 90 °C, achieved by using heat pumps operating in series.

Drammen (reproduced courtesy of Star Refrigeration)

Heat pumps at Drammen, Norway (reproduced courtesy of Star Refrigeration)

Kingston Heights in London (below) is an example of using a river as the water source. Thames water at an average temperature of 10 °C is extracted, filtered and pumped to a plate heat exchanger transferring energy to a closed loop low temperature distribution system. This water/glycol mixture is fed to 39 heat pumps. Each of these feed a number of heat pumps with interconnecting refrigerant pipework. The overall scheme provides 2.3 MW to the complex.

Next steps

Identify opportunities

- Identify water bodies which could act as a source (the DECC Water Source Heat Map can help with this).
- Identify the heating/cooling demand.
- Carry out a thorough feasibility study.

Download the Code

The Code of Practice is available for download/purchase from cibse.org/CP2. It is free to CIBSE, HPA and GSHPA members (electronic copy) and at a small cost for non-members or for printed copies.

Attend a 1 day training course

'Introduction to heat pumps and the Code of Practice'

This is a one day course which provides an introduction to heat pumps and the Code of Practice for those who are involved in procuring/developing heat pumps and those using or specifying the Code.

The course runs regularly and can also be delivered at your site (minimum 6 staff) at discounted rates.

See www.cibse.org/training for details.

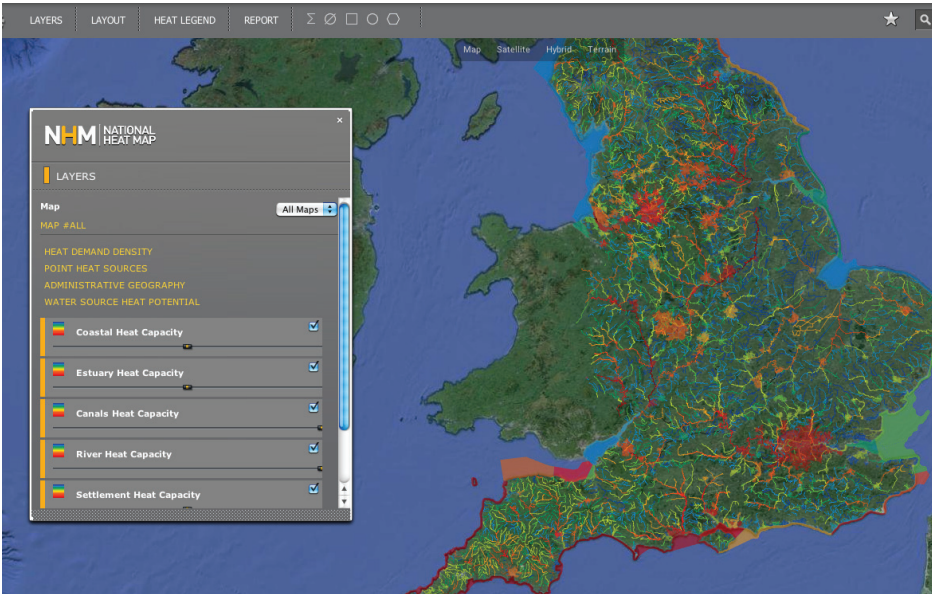

DECC Water Source Heat Map, 2015 (tools.decc.gov.uk/nationalheatmap/)